SPANISH FORK CITY
40 SOUTH MAIN STREET
SPANISH FORK, UT 84660
(801) 804-4550

STANDARD DRAWING

MECHANICAL RESTRAINING DEVICES FOR PRESSURE PIPE REDUCERS

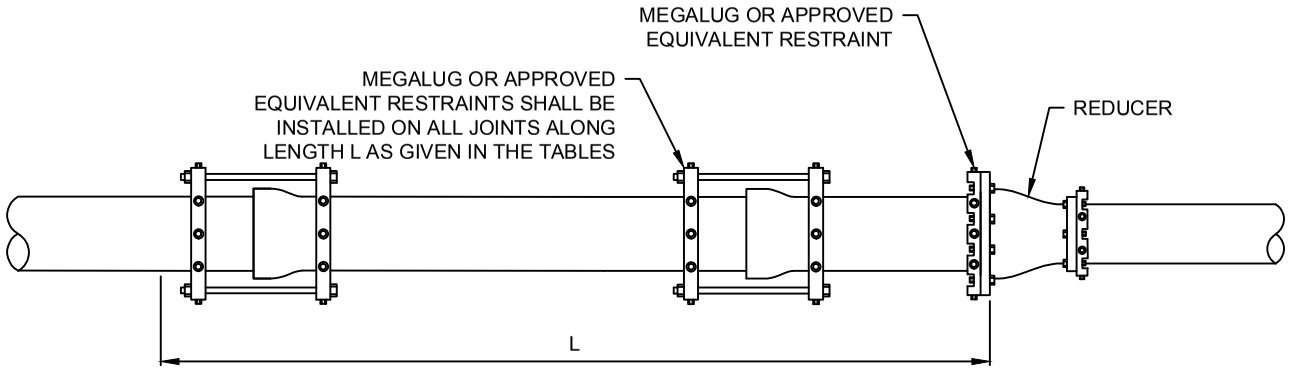

PVC PIPE

MECHANICAL RESTRAINT SPECIFICATION "L" IN FEET FOR REDUCERS ON SPECIFIED DIAMETERS										
SOIL CONDITION & DEPTH OF PIPE	12"-4"	12"-6"	12"-8"	12"-10"	10"-4"	10"-6"	10"-8"	8"-4"	8"-6"	6"-4"
CLASS A NATIVE SOIL - 2' BURY	138	130	95	88	124	94	51	92	33	51
CLASS A NATIVE SOIL - 4' BURY	98	82	60	55	77	58	32	57	18	31
CLASS B NATIVE SOIL - 2' BURY	200	168	122	113	160	121	66	119	43	66
CLASS B NATIVE SOIL - 4' BURY	107	89	65	60	85	64	35	62	36	34

DUCTILE IRON PIPE

MECHANICAL RESTRAINT SPECIFICATION "L" IN FEET FOR REDUCERS ON SPECIFIED DIAMETERS										
SOIL CONDITION & DEPTH OF PIPE	12"-4"	12"-6"	12"-8"	12"-10"	10"-4"	10"-6"	10"-8"	8"-4"	8"-6"	6"-4"
CLASS A NATIVE SOIL - 2' BURY	95	80	58	54	76	57	31	57	33	31
CLASS A NATIVE SOIL - 4' BURY	52	44	32	30	41	31	18	30	18	18
CLASS B NATIVE SOIL - 2' BURY	124	104	76	70	100	75	41	74	43	41
CLASS B NATIVE SOIL - 4' BURY	68	57	42	39	54	41	22	40	23	22

CLASS A SOILS
- GW: WELL GRADED GRAVELS AND GRAVEL-SAND MIXTURES, LITTLE OR NO FINES
- SW: WELL GRADED SANDS AND GRAVELLY SANDS, LITTLE OR NO FINES
- GC: CLAYEY GRAVELS, GRAVEL-SAND-CLAY MIXTURES
- SC: CLAYEY SANDS, SAND-CLAY MIXTURES

CLASS B SOILS
- GP: POORLY GRADED GRAVELS AND GRAVEL-SAND MIXTURES, LITTLE OR NO FINES
- SP: POORLY GRADED SANDS AND GRAVELLY SANDS, LITTLE OR NO FINES
- GM: SILTY GRAVELS, GRAVEL-SAND-SILT MIXTURES
- SM: SILTY SANDS, SAND SILT MIXTURES
- CL: INORGANIC CLAYS OF LOW TO MEDIUM PLASTICITY, GRAVELLY CLAYS, SANDY LAYS, LEAN CLAYS
- ML: INORGANIC SILTS, VERY FINE SANDS, ROCK FLOUR, SILTY OR CLAYEY FINE SANDS

NOTES:

1. ALL RESTRAINING DEVICES SHALL BE INSTALLED ACCORDING TO THESE REQUIREMENTS OR MANUFACTURER SPECIFICATIONS, WHICHEVER IS MOST CONSERVATIVE.
2. FOR DEAD ENDS WITH BOTH PVC AND DUCTILE IRON PIPE USE THE PVC TABLE.
3. MECHANICAL RESTRAINTS FOR PIPE LARGER THAN 12" IN DIAMETER MUST BE DESIGNED BY A LICENSED PROFESSIONAL ENGINEER.
4. MECHANICAL RESTRAINTS MAY ONLY BE USED ON PVC OR DUCTILE IRON PIPE.

DRAWN:	JLR
DESIGN:	CJP
CHECK:	CMT
DATE:	6/22/16

SCALE: NONE

STANDARD 9