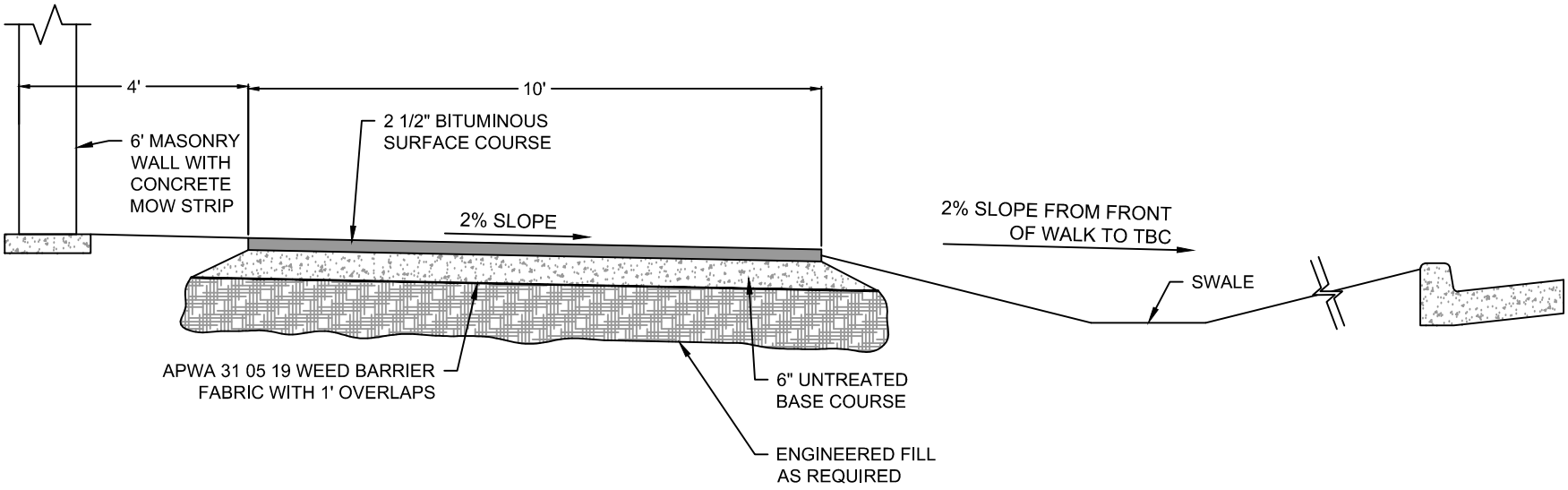

TYPE "E" TRAIL

NOTES:

1. ALL TREES, SHRUBS AND OTHER VEGETATION SHALL BE REMOVED FROM THE CLEAR ZONE.
2. CITY SHALL INSPECT EACH BASE COURSE OR FABRIC LAYER BEFORE COVERING.
3. ALL WEEDS SHALL BE SPRAYED AND KILLED WITH ROUNDUP OR AN APPROVED EQUIVALENT ONE WEEK BEFORE ANY WORK MAY BE PERFORMED, AND WITHIN 3 WEEKS OF THE PLACEMENT OF UNTREATED BASE COURSE.
4. TRAIL LANES SHALL BE DELINEATED BY A CENTER, SINGLE, DASHED, YELLOW LINE.

SPANISH FORK CITY
40 SOUTH MAIN STREET
SPANISH FORK, UT 84660
(801) 804-4550

STANDARD DRAWING

ARTERIAL / COLLECTOR
TRAIL SECTIONS

DRAWN:	JLR
DESIGN:	CJP
CHECK:	CMT
DATE:	6/22/16

SCALE: NONE

STANDARD 47