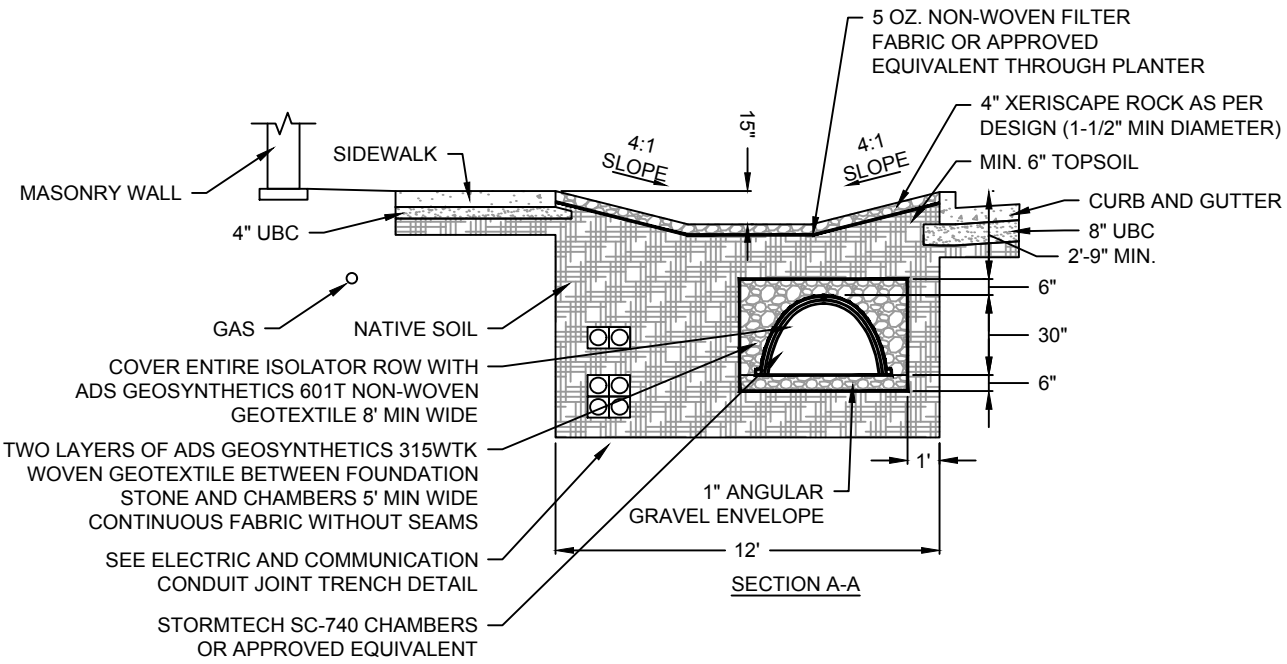

SECTION A-A

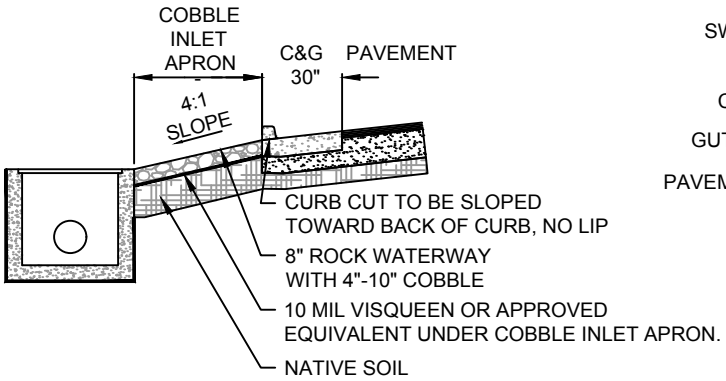

SECTION B-B
CURB INLET

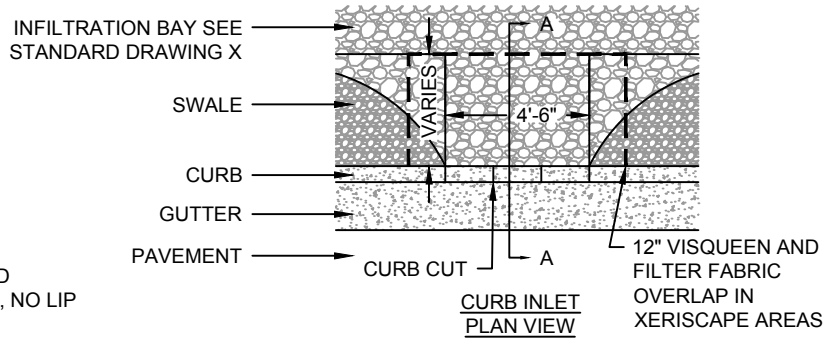

CURB INLET
PLAN VIEW

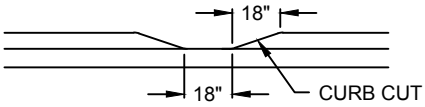

CURB INLET
PROFILE

TABLE 1	
0.35% TO 0.50%	300'
0.5% TO 0.75%	200'
>0.75%	100'

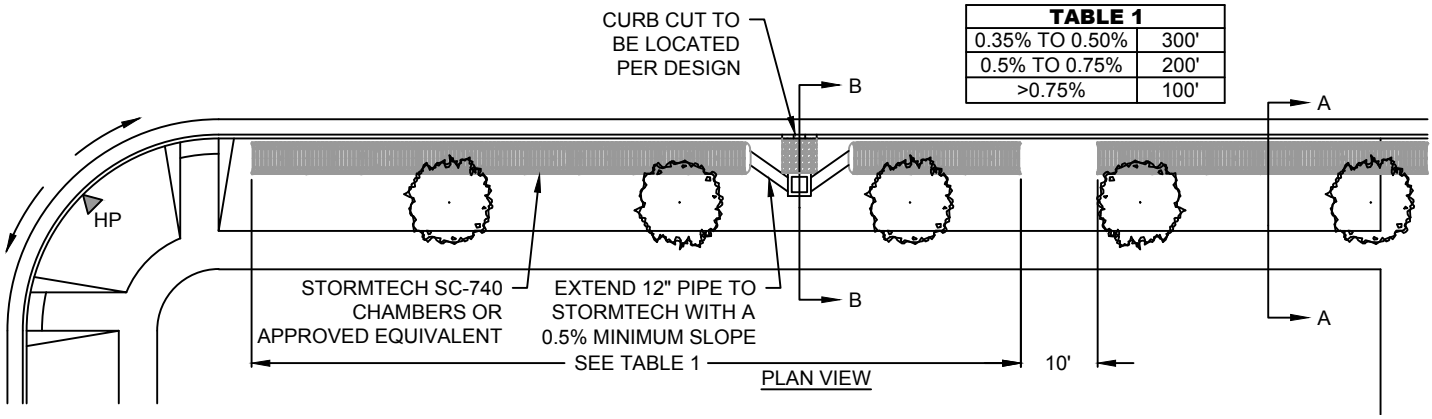

PLAN VIEW

NOTES:

1. COBBLE INLET APRON TO BE A MINIMUM OF 8" THICK.
2. FILTER FABRIC TO BE PLACED UNDER COBBLE INFILTRATION BAY. FILTER FABRIC SHALL MEET THE REQUIREMENTS OF APWA 31 05 19 (GEOTEXTILES).
3. ALL PLANTER AREAS BETWEEN THE CURB AND SIDEWALK SHALL BE LANDSCAPED WITH PERVIOUS MATERIALS UNLESS OTHERWISE APPROVED BY THE CITY ENGINEER OR DESIGNEE.

SPANISH FORK CITY
40 SOUTH MAIN STREET
SPANISH FORK, UT 84660
(801) 804-4550

STANDARD DRAWING

LOW IMPACT DEVELOPMENT (LID) COLLECTOR / ARTERIAL / COMMERCIAL STREET XERISCAPE SWALE

DRAWN:	JLR
DESIGN:	CJP
CHECK:	CMT
DATE:	6/22/16

SCALE: NONE

STANDARD 36