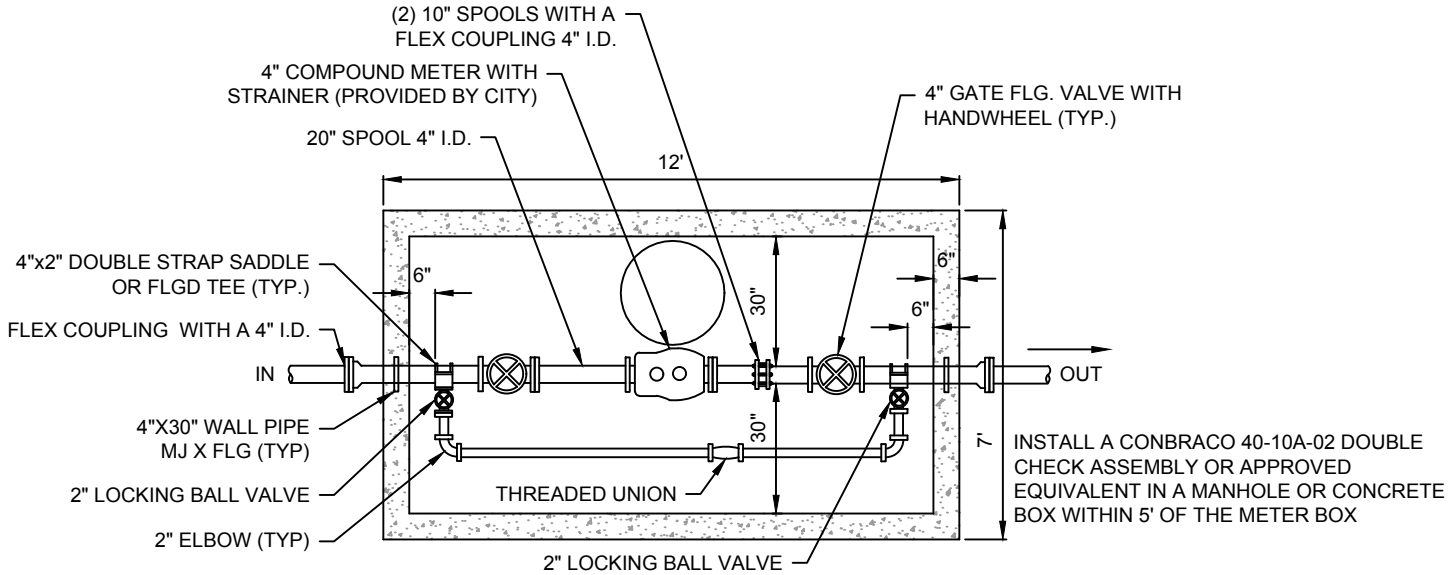

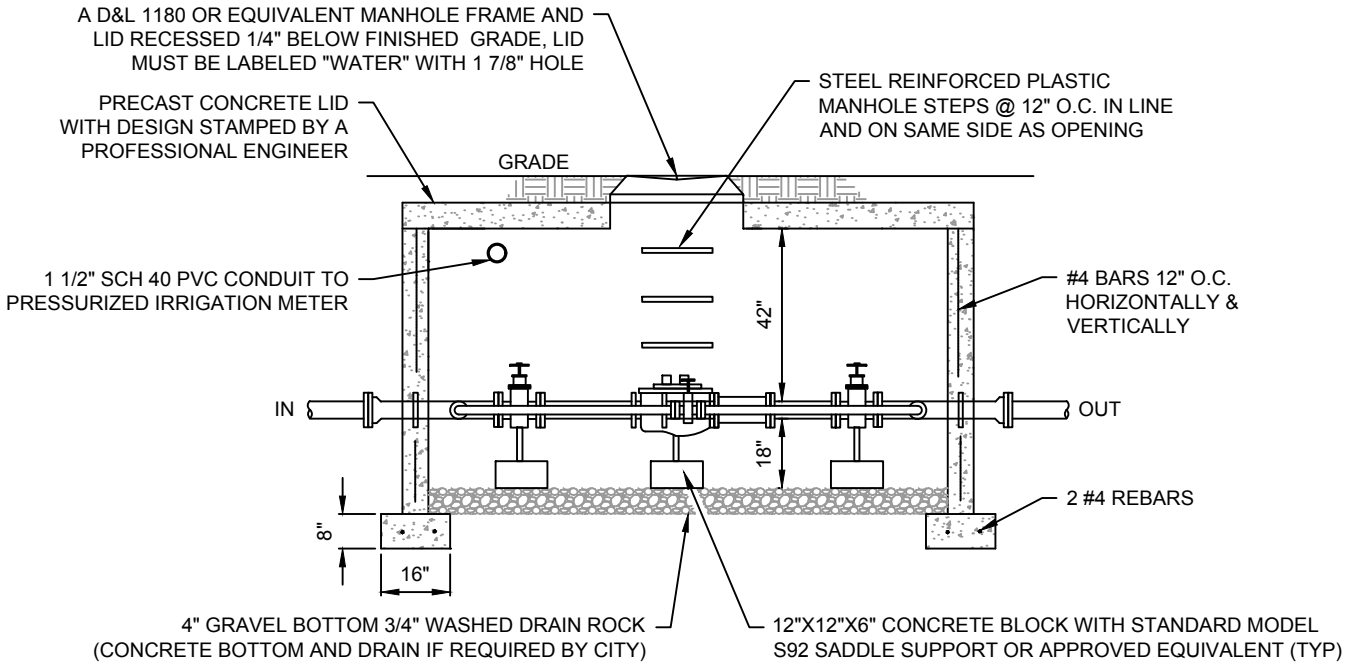

NOTES:

1. ALL 4" PIPE AND FITTINGS SHALL BE DUCTILE IRON.
2. ALL 2" PIPE AND FITTINGS SHALL BE BRASS OR COPPER WITH A STAINLESS STEEL HANDLE.
3. ALL REBAR SHALL HAVE 30" OVERLAPS.
4. PORTLAND CEMENT CONCRETE MAY ONLY BE POURED ON UNDISTURBED SOIL, 3/4" CRUSHED GRAVEL, OR COMPACTED UNTREATED ROAD BASE.
5. LARGER WATER SERVICES SHALL BE INDIVIDUALLY DESIGNED AND STAMPED BY A LICENSED PROFESSIONAL ENGINEER.
6. METER BOXES SHALL BE PLACED IN LANDSCAPE AREAS.
7. BURY CONDUIT 18" BELOW GRADE.

SPANISH FORK CITY
40 SOUTH MAIN STREET
SPANISH FORK, UT 84660
(801) 804-4550

STANDARD DRAWING

4" WATER SERVICE

DRAWN: JLR	SCALE: NONE	
DESIGN: CJP		
CHECK: CMT	STANDARD 17	
DATE: 6/22/16		