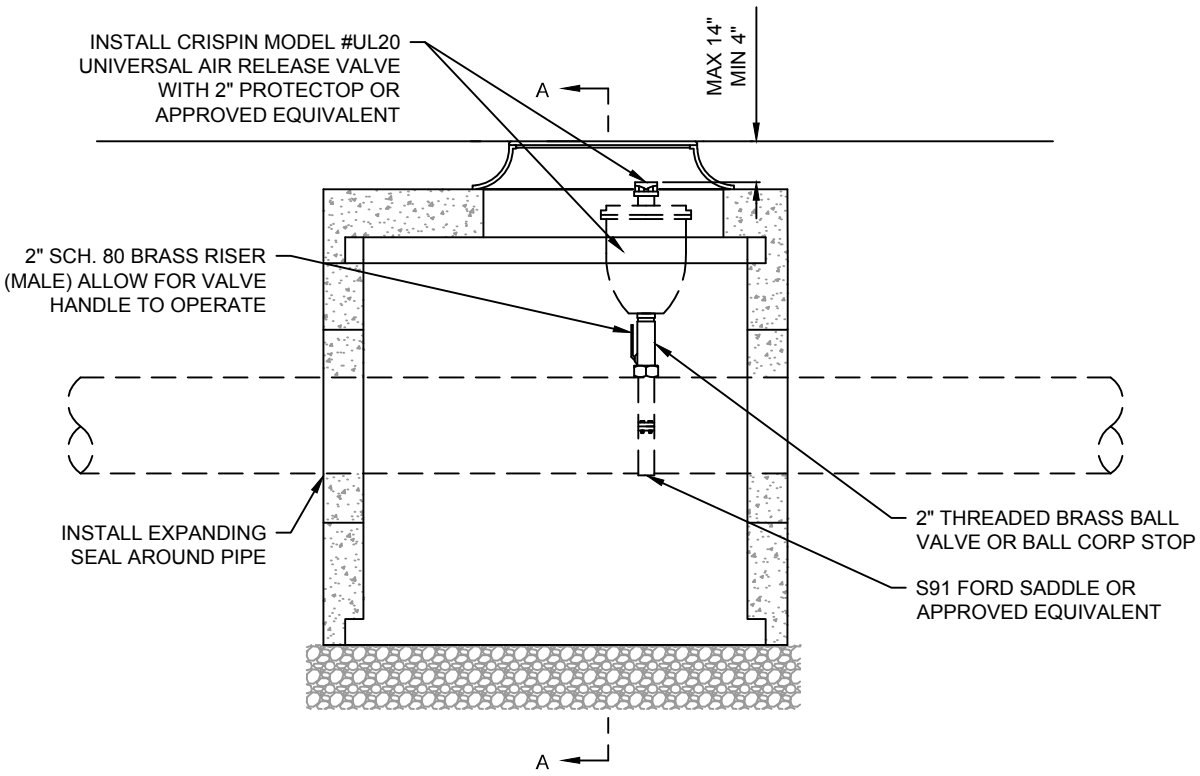

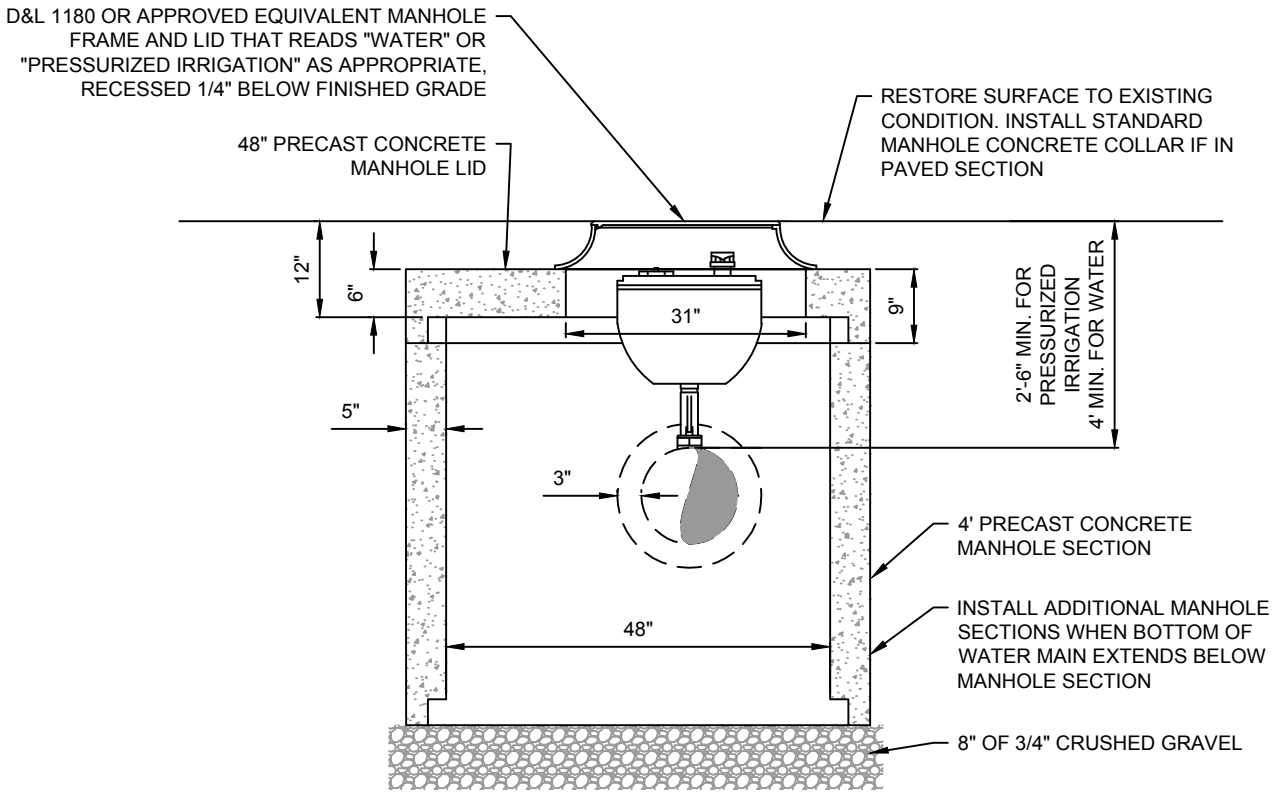

SECTION A-A

NOTES:

1. UNDER WET CONDITIONS INSTALL A DRAIN ABOVE THE WATER TABLE AND BELOW THE VALVE.
2. IF POSSIBLE MOVE VALVE OUT OF LINE OF ACCESS.
3. ALL CULINARY AIR RELEASE SHALL BE ACCORDING TO APWA PLAN NO. 575 AND APPROVED BY THE CITY ENGINEER.

SPANISH FORK CITY 40 SOUTH MAIN STREET SPANISH FORK, UT 84660 (801) 804-4550	**STANDARD DRAWING** PRESSURIZED IRRIGATION COMBINATION AIR VACUUM & RELEASE VALVE	DRAWN: JLR DESIGN: CJP CHECK: CMT DATE: 6/22/16	SCALE: NONE STANDARD 11